mareco LUCE
47032 bertinoro (FC) Italia
via s.croce, 121 (z.i.)
tel. +39 0543 4687
fax +39 0543 449051
info@marecoluce.it
www.marecoluce.it

This document is exclusive MARECO LUCE s.r.l., is strictly prohibited disclosure or reproduction, even partial, as well the use of without written consent of MARECO LUCE s.r.l..The company reserves the right to change models, dimensions and materials at any time without notice.

PRODUCT DATA SHEET

Delux Service

Code : 1025600M

PRODUCT FAMILY
- Outdoor residential square shaped complete with base for plinth/floor installation (IP55 with front cover closed)
- Energy and service distribution bollard, for the mains connection of portable appliances, gardens tools, phones, etc….
- Possible options: emergency light, USB port, motion sensor

MATERIAL CHARACTERISTICS
- Top cover made of die-cast aluminium (ADC12) anodized and painted
- Housing made of extruded aluminium EN AW 6060 with thermal treatment, subjected to cleaning and
degreasing treatment before anodizing and painting
- Reinforced thermoplastic base in NY-FV30%
- Polyester powder coating with a pretreatment (Phosphochromating method) to ensure high protection against weathering
- Screws in stainless steel A2

COLOR
- Metallic grey RAL 9006
- Anthracite RAL 7016 textured
- Rust

INSTALLATION AND ORDINARY MAINTENANCE CHARACTERISTICS
- Luminaire for direct installation on plinth/floor through some screws and expansion caps (not supplied)
- Preset for installation on a Ø60mm pole (Hmin 80mm - Hmax 150mm)
- Ordinary and extraordinary maintenance not necessary

DIMENSIONS
- 85x85x550mm
- 85x85x752mm
- Base 85x85

COMPULSORY MODULES TO BE ORDERED SEPARATELY:
UNIVERSAL SCHUKO SOCKET - COD.10250001
- 2 modules (1 panel)
- Socket 2P+T 16A 250V~universal, for europlugs 2P 2,5A
- Socket 2P and 2P+T 10A and 16A Italian standard
- Socket 2P+T 16A German standard
- Socket 2P American standard with flat pins 15A 125V non-polarized
- It does not make the earth connection with the socket 2P+T 16A 250V~ French standard

BLANKING MODULE - COD.10250002
- 1 module (half a panel)

REMOVABLE TORCH - COD.10250003
- 2 modules (1 panel)
- LED 0,5W 20Lm, it switches on when the power supply fails
- IP20
- Class 2
- Removable and complete with on-off switch
- Equipped with anti-theft screw

USB PORT - COD.10250004
- 1 module (half a panel)
- Power supply unit 5V 1.5A for electronic devices
- 1 USB output, type A
- Power supply 120-230V~ 50/60Hz

MOTION SENSOR - COD.10250005
- 1 module (half a panel)
- Switch with infrared motion sensor for turning on the lights, twilight sensor threshold regulation, and cycle
timing control
- Relè output NO 6A 230V~
- Power supply 230V~ 50-60Hz

TECHNICAL SPECS
• Warranty: 3 years

Rev. 1 - 24/04/20

Details
• Conformity with EU Directives
• IP 55

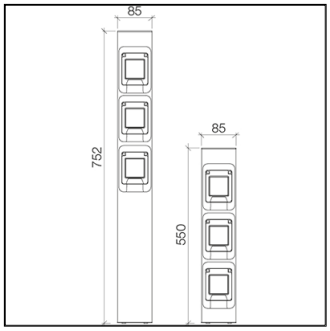

CE	IP55