mareco LUCE
47032 bertinoro (FC) Italia
via s.croce, 121 (z.i.)
tel. +39 0543 4687
fax +39 0543 449051
info@marecoluce.it
www.marecoluce.it

This document is exclusive MARECO LUCE s.r.l., is strictly prohibited disclosure or reproduction, even partial, as well the use of without written consent of MARECO LUCE s.r.l..The company reserves the right to change models, dimensions and materials at any time without notice.

PRODUCT DATA SHEET

Sfera Ø400 Led IP65

Code : 1100582T

PRODUCT FAMILY

- Urban architectural LED luminaire, with spherical diffuser, suitable for uplight installation on poles or brackets Ø60mm on top (IP65)

MATERIAL CHARACTERISTICS

- Spherical transparent or white diffuser Ø400mm in PMMA (acrylic), with bayonet neck
- Base in NY-FV30% with added elastomers, which increase mechanical strength and are self-extinguishing (Glow Wire 650°C)
- Wiring includes a round covering cone for driver recovery made of highly resistant PC (polycarbonate)
- A top cover and an antiglare louver made in NY-FV30% supports the LED's circuit
- Silicone gaskets
- A2 stainless steel screws

COLOUR

- Transparent
- White

LIGHTING CHARACTERISTICS

- LED’s lighting source in fixed position
- Immediately ON at 100% of light flux
- Monochromatic LED module (50 Led's)
- Round symmetrical light throw

WIRING CHARACTERISTICS

- LED’s module 15W
- Built-in driver (500mA driver output)

INSTALLATION AND ORDINARY MAINTENANCE CHARACTERISTICS

- Luminaire for use with poles or brackets Ø60mm on top
- To be installed by two expanders in reinforced thermoplastic that secure the luminaire to the pole or bracket from inside, by tightening the screws
- Ordinary maintenance by loosening the n.3 pins and turning the diffuser with bayonet neck
- Extraordinary maintenance can be conducted by removing the diffuser

DIMENSIONS

- Ø400x500mm

TECHNICAL SPECS

• Step MacAdam: 3
• Lifetime Led's: L80/B50 - 60Kh Tc 85°C
• Lifetime driver: 50Kh
• Power factor: >0.95
• Warranty: 5 years

TECHNICAL SPECS 4000K - Transparent diffuser

• LED’s output: 2626lm@tc25°C
• Luminaire output: 1825lm@ta25°C
• LED's efficiency: 184lm/W
• Luminaire efficiency: 114lm/W
• LED’s consumption: 14,3W
• Luminaire consumption: 16W

TECHNICAL SPECS 3000K - Transparent diffuser

• LED’s output: 2479,4lm@tc25°C
• Luminaire output: 1722lm@ta25°C
• LED's efficiency: 173lm/W
• Luminaire efficiency: 108lm/W
• LED’s consumption: 14,3W
• Luminaire consumption: 16W

TECHNICAL SPECS 4000K - White diffuser

• LED’s output: 2626lm@tc25°C
• Luminaire output: 1483lm@ta25°C
• LED's efficiency: 184lm/W
• Luminaire efficiency: 93lm/W
• LED’s consumption: 14,3W
• Luminaire consumption: 16W

TECHNICAL SPECS 3000K - White diffuser

• LED’s output: 2479lm@tc25°C
• Luminaire output: 1400lm@ta25°C
• LED's efficiency: 173lm/W
• Luminaire efficiency: 87lm/W
• LED’s consumption: 14,3W
• Luminaire consumption: 16W

Rev 03 - 21/02/2023

Details

• Conformity with EU Directives
• Double insulation/class II
• IK08
• RG1
• CRI>80
• IP 65

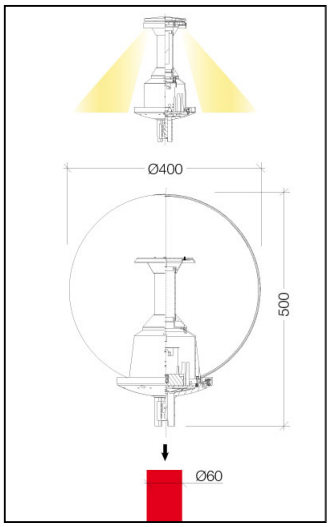

220-240V 50/60Hz 16W
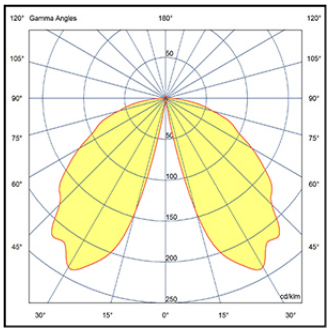
CE		IK 08	RG 1	CRI ≥80	IP65